H916 16oz Drink Cup (16)

16oz Paper HOT Cup-Single Poly

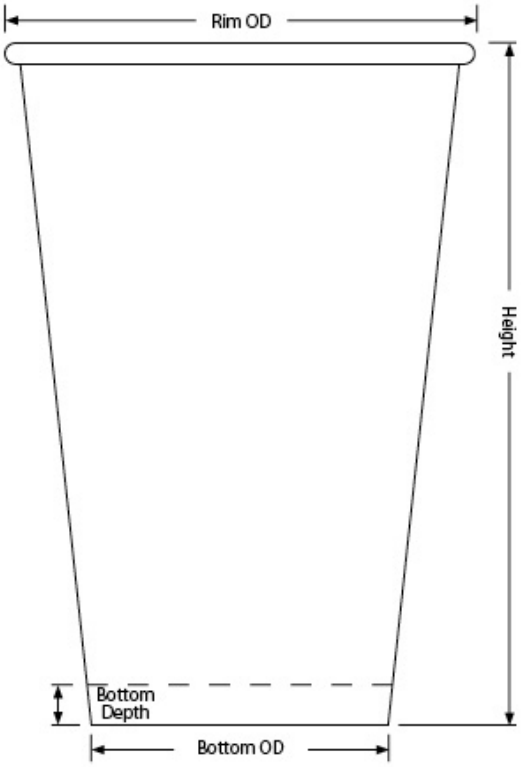

Capacity: 16.00oz / 473.00ml

Material: 18pt Paper, Poly 1-side, FSC SFI PEFC Certified

Minimum: 500 pieces

Height: 5.099" ±.015

Rim Height: 0.150" ±.010

Rim OD: 3.515" ±.010

Bottom OD: 2.215" ±.010

Bottom Depth: 0.301" ±.010

Shipping: FOB NV

16oz Drink Cup (16) available in Double-Poly Paper Single-Poly Paper Vanish Plastic-Free Paper Clear Plastic

H916 Standard Case Pack Configuration

Box Dimensions: 18.10"x14.58"x12.50"
Box Volume: 1.91 Cubic Feet
Box Weight: 17 lbs
Box Content: 500 Pieces
Pallet Dimensions: 40.00"x48.00"x93"
Pallet Weight: 759 lbs
Pallet Content: 21,000 Pieces / 42 Boxes

SEE LID OPTIONS ON LAST PAGE

Specifications to be used for the evaluation and purchase of Visstun® products only and are subject to change without notice.
All orders are subject to 10% over to 10% under run.

Pallet for H916

16oz Paper HOT Cup-Single Poly

Pallet View

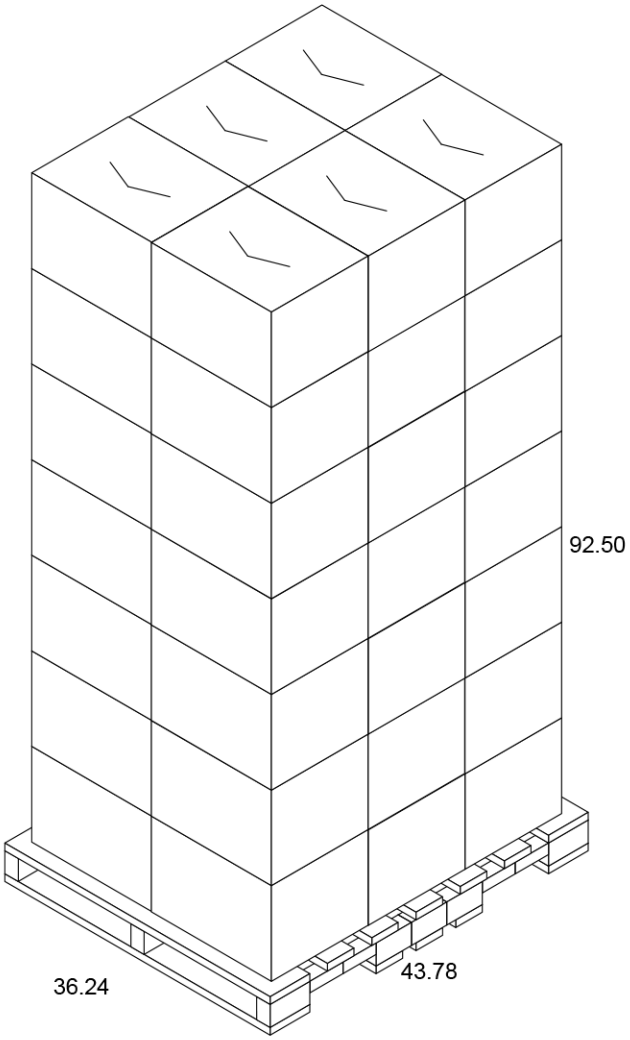

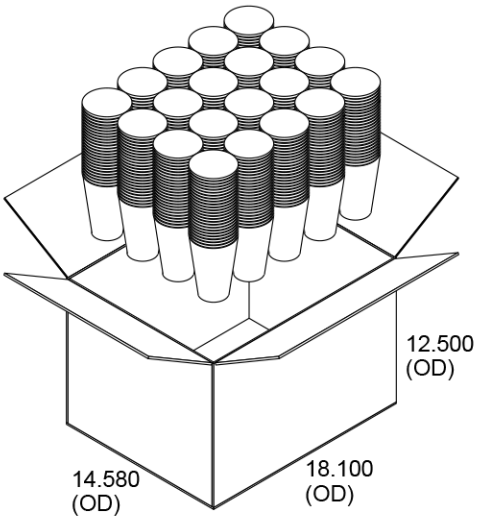

Top View

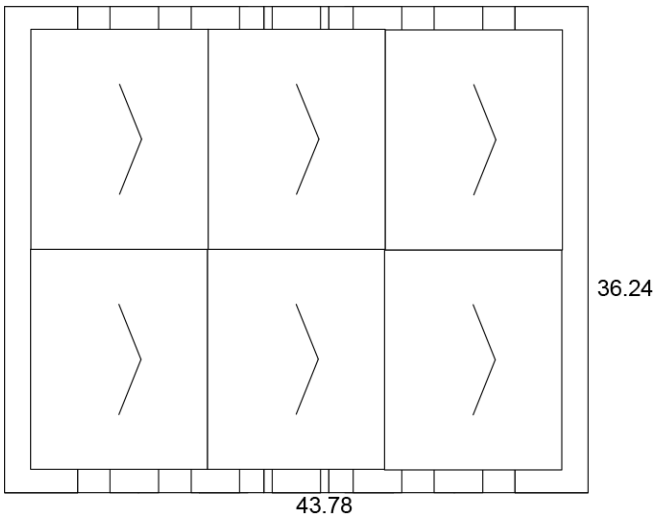

Lid Options for H916

16oz Paper HOT Cup-Single Poly



P2 Printed Snap-Fit Paper

- Hi-Definition, Full Color
- Customizable
- Seamlessly registered text
- Uninterrupted text
- Two-four week leadtime
- Case: 500 - 10lbs



Clear Single-Use Lid

- Clear, thermo-formed
- With & without straw slot
- Case: 1,000 - 7lbs



Clear High Dome Lid

- Clear, thermo-formed
- With & without top opening
- Case: 1,000 - 10lbs



Cappuccino Lid

- White/Black, thermo-formed
- Vented lid
- Case: 1,000 - 8lbs