C9R6 Pint 16oz Container (R6)

16oz PINT-R6 Paper Container-Double Poly

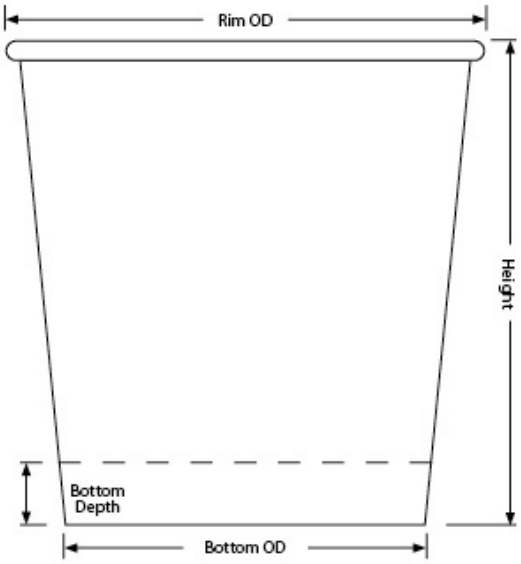

Capacity: 16.10oz / 474.00ml

Material: 17pt Paper, Poly 2-sides, FSC SFI PEFC Certified

Minimum: 1,000 pieces

Height: 3.885" ±.015

Rim Height: 0.150" ±.010

Rim OD: 3.839" ±.010

Bottom OD: 2.889" ±.010

Bottom Depth: 0.400" ±.010

Shipping: FOB NV

Pint 16oz Container (R6) available in Double-Poly Paper Single-Poly Paper Vanish Plastic-Free Paper

C9R6 Standard Case Pack Configuration

Box Dimensions: 19.70"x15.86"x23.83"
Box Volume: 4.31 Cubic Feet
Box Weight: 31 lbs
Box Content: 1,000 Pieces
Pallet Dimensions: 40.00"x48.00"x92"
Pallet Weight: 727 lbs
Pallet Content: 22,000 Pieces / 22 Boxes

SEE LID OPTIONS ON LAST PAGE

Specifications to be used for the evaluation and purchase of Visstun® products only and are subject to change without notice.
All orders are subject to 10% over to 10% under run.

Pallet for C9R6

16oz PINT-R6 Paper Container-Double Poly

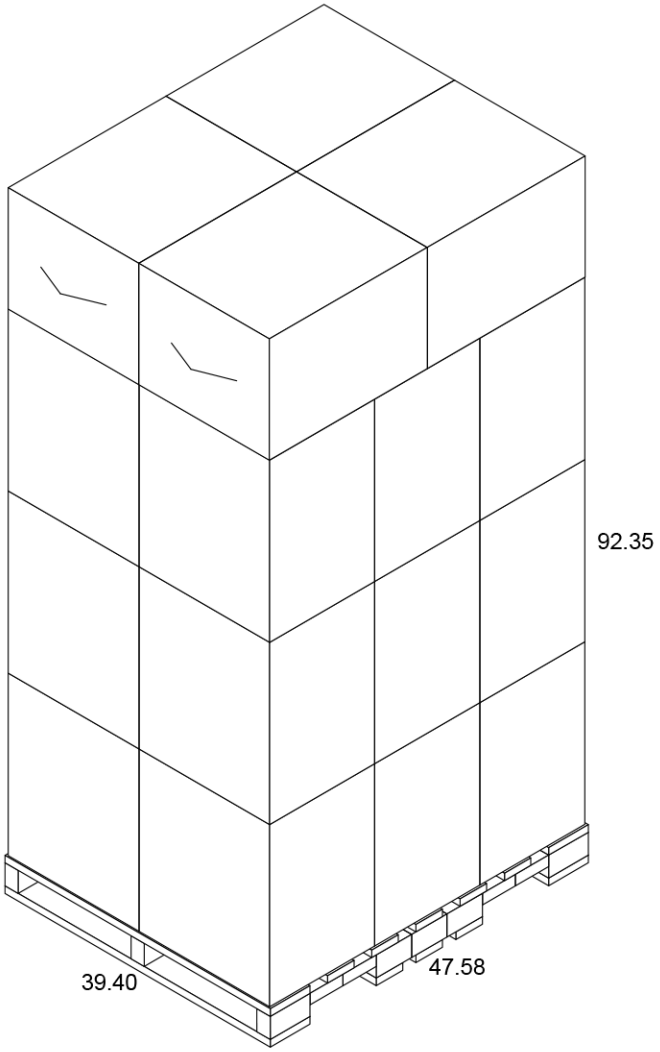

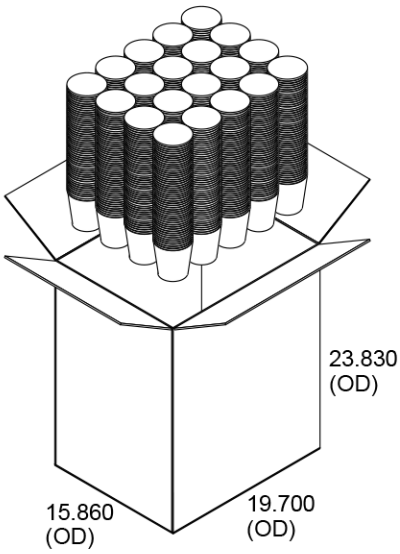

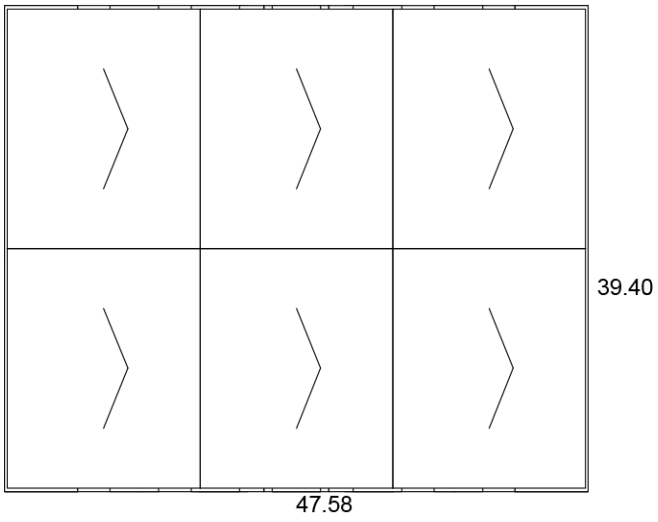

Lid Options for C9R6

16oz PINT-R6 Paper Container-Double Poly



P2 Printed Snap-Fit Paper

- Hi-Definition, Full Color
- Customizable
- Seamlessly registered text
- Uninterrupted text
- Two-four week leadtime
- Case: 500 - 12lbs



Reusable Basic Lids

- Reusable, injection molded
- Black with no straw slot
- Black with straw slot
- White with no straw slot
- White with straw slot
- Case: 1,000 - 17lbs



Clear Single-Use Lid

- Clear, thermo-formed
- With & without straw slot
- Case: 1,000 - 9lbs



Clear U-Dome Lid

- Clear, thermo-formed
- Container fits in lid
- Case: 1,000 - 12lbs



Deli/Soup Lid

- Black/white thermo-formed
- Vented lid
- Case: 1,000 - 10lbs